MONOFEEDER® ST

		MONO 7 ST	MONO 11 ST	MONO 14 ST	MONO 17 ST	MONO 17 ST PLUS	MONO 20 ST PLUS	MONO 22 ST PLUS	MONO 26 ST PLUS
Capacity	m^3	7	11	14	17	17	20	22	26
Length	mm	5600	6200	6400	6700	6700	6900	7300	7300
Width	mm	1900	2000	2300	2300	2300	2550	2550	2750
Height	mm	2200	2450	2650	2750	2750	2950	2950	3300
Height of lowered versions	mm	By request	By request	By request	By request	By request	By request	By request	By request
External track	mm	1700	1850	2200	2200	2200	2450	2450	2700
Wheels		10.0/75-15.3	285/70-19.5	15-22.5	15-22.5	15-22.5	15-22.5	15-22.5	18-22.5
Auger diameter	mm	670	770	870	870	960	1060	1060	1160
Discharge width	mm	800	800	800	800	1000	1000	1000	1000
Power requirement	HP	50	60	80	90	90	100	110	120
Weight	Kg	2400	3100	4000	4500	4500	5300	6000	8000

MONOFEEDER® DF

		MONO 7 DF	MONO 11 DF	MONO 14 DF	MONO 17 DF	MONO 17 DF PLUS	MONO 20 DF PLUS	MONO 22 DF PLUS
Capacity	m^3	7	11	14	17	17	20	22
Length	mm	6400	7000	7200	7500	7500	7700	8200
Width	mm	1950	2050	2350	2350	2350	2600	2600
Height	mm	2200	2450	2650	2750	2750	2950	2950
Height of lowered versions	mm	By request	By request	By request	By request	By request	By request	By request
External track	mm	1700	1850	2200	2200	2200	2450	2450
Wheels		10.0/75-15.3	285/70-19.5	15-22.5	15-22.5	15-22.5	15-22.5	15-22.5
Auger diameter	mm	670	770	870	870	960	1060	1060
Discharge width	mm	800	800	800	800	1000	1000	1000
Power requirement	HP	60	80	90	100	100	110	120
Weight	Kg	3300	4100	5000	5500	5500	6500	7000

Hydraulic foot

Hydraulic lifting of discharge elevator

Electric distributor

SGARIBOLDI

+39 0377 430 405
info@sgariboldi.it
sgariboldi.official
SgariboldiVideo

+39 0377 430 415
marketing@sgariboldi.it
@sgariboldi.official
Company-Sgariboldi

App Store Google play

SGARIBOLDI S.r.l. Via Pietro Nenni 15 | 26845 Codogno - Lodi (Itália)

www.sgariboldi.it

MONOFEEDER® ST-DF

Horizontal trailed mixer feeders

SGARIBOLDI
INNOVATION, PERFORMANCE, PEOPLE

Auger transmission

SG version

RC version

Standard version

01 Electronic weighing system
02 Remote control by cables
03 Adjustable hitch
04 Left side discharge
05 Rear safety protection
06 Independent hydraulic system
07 Side foot
08 Self-loading drum with reverse drive

MONOFEEDER® HORIZONTAL TECHNOLOGY

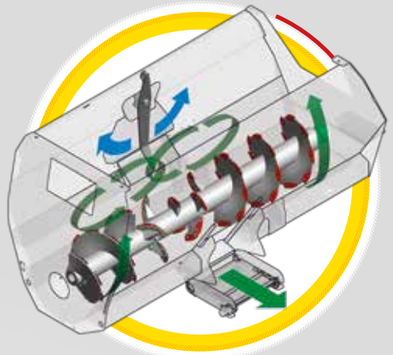

An advanced cutting and mixing system with a single large horizontal auger that guarantees maximum operational reliability, but also features the smallest size on the market.

Twin Flow System

A double flow to speed-up work.
The auger, with its counterposed spirals, forces a dynamic twin flow upon the materials, from the front and rear part of the machine towards the centre of the tank.

- The SG setup (optional), the best for mixing without cutting, is able to perfectly homogenise the pre-cut products
- The RC setup (optional), a patented baling kit, is capable of splitting apart bales of all sizes, diameter and compactness, though still preserving the product's structure

MONOFEEDER® ST

The advantages of the deflector

Inside the tank, the exclusive screening arm:
- Reduces mixing time
- Allows effective material flow

Bolted counter knives
with an especially designed arrangement according to the various types of ingredients.

With loading system

Loading drum
The careful design of the shape of the drum, the relevant housing and the layout of the knives,together with the very high power, make it possible to perfectly load any product. This guarantees a smooth and uniform clamp face, thus preventing it to go mouldy.

Rear shield
The duly shaped hydraulic shield makes it possible to collect the products down to the bottom and obtain a perfect cleaning of the ground.

Protection system
The rear auger protection device, which makes it possible to always keep it rotating is a sliding wall that rises with the progressive lifting of the loading arms, thus making any accidental contact with the mixing auger impossible while still allowing the optimal loading of the products.

MONOFEEDER® DF

Rapid mixing, quality mixture

Once the last ingredient has been loaded, the mix can be instantly distributed to the animals. The resulting feed is a soft, uniform mixture, cut to perfection.
- Excellent "Foraging Value" (compared to the siloed products' structure)
- No overheating of the final product. In each phase of the mixing, the product is never pushed or pressed against the walls
- Maximum desirability and rumination. The fresh product, with its respected fibres, increases the bovine's appetite and the speed in which the feed moves towards the rumen.